ROBOT WARS CONSTRUCTION SET

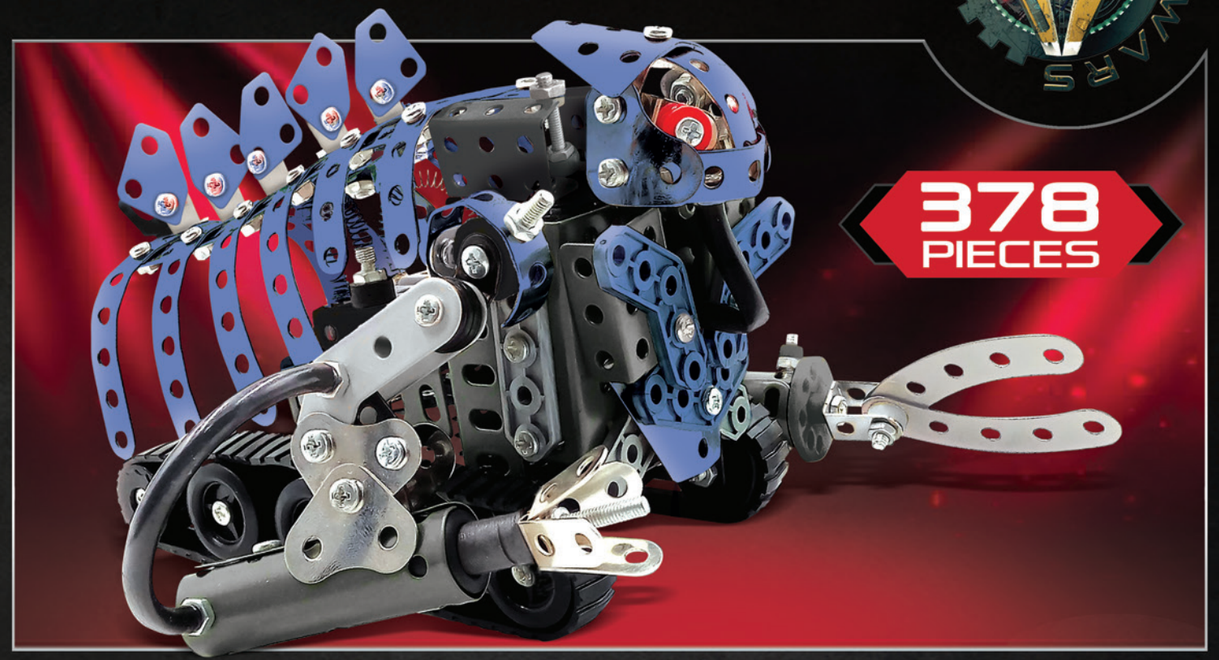

SIR KILLALOT INSTRUCTIONS

26

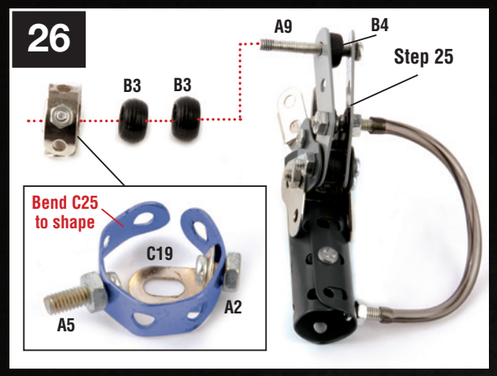

27

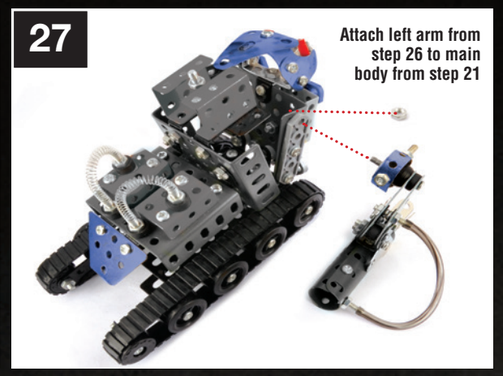

28

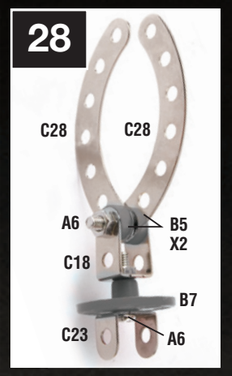

29

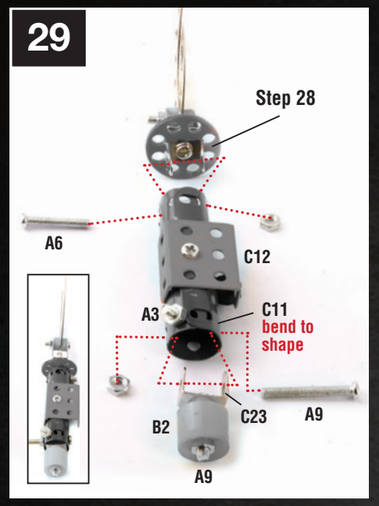

30

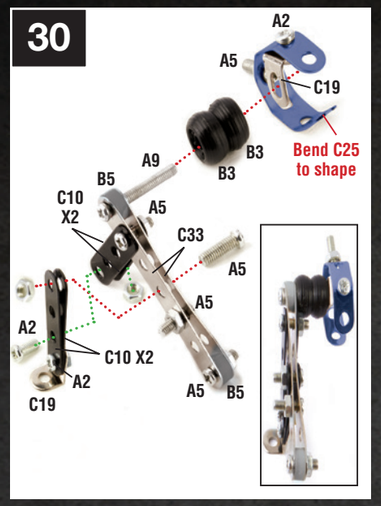

31

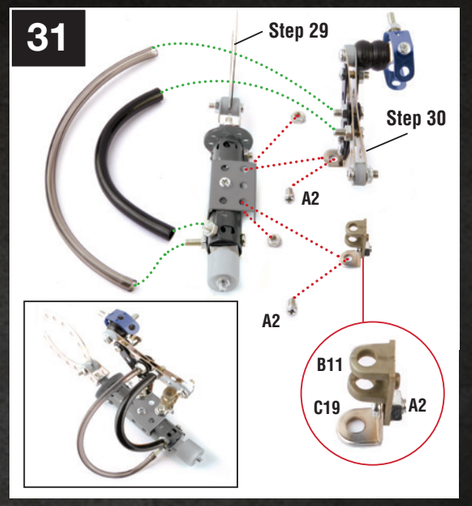

32

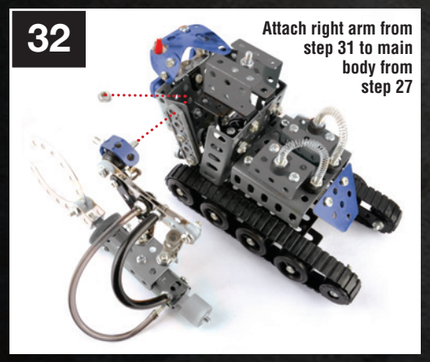

34

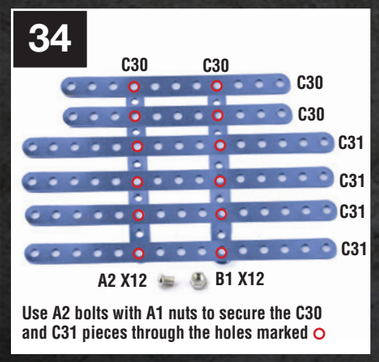

35

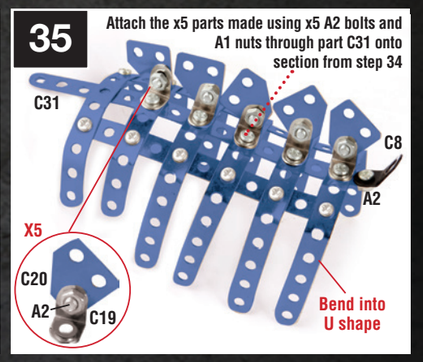

36

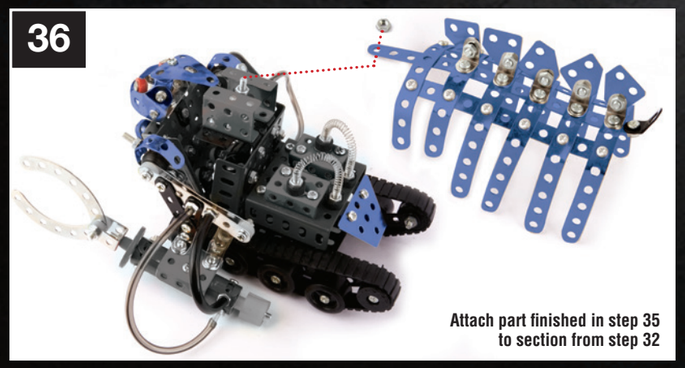

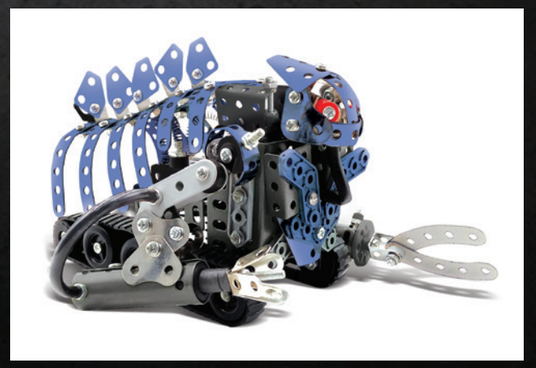

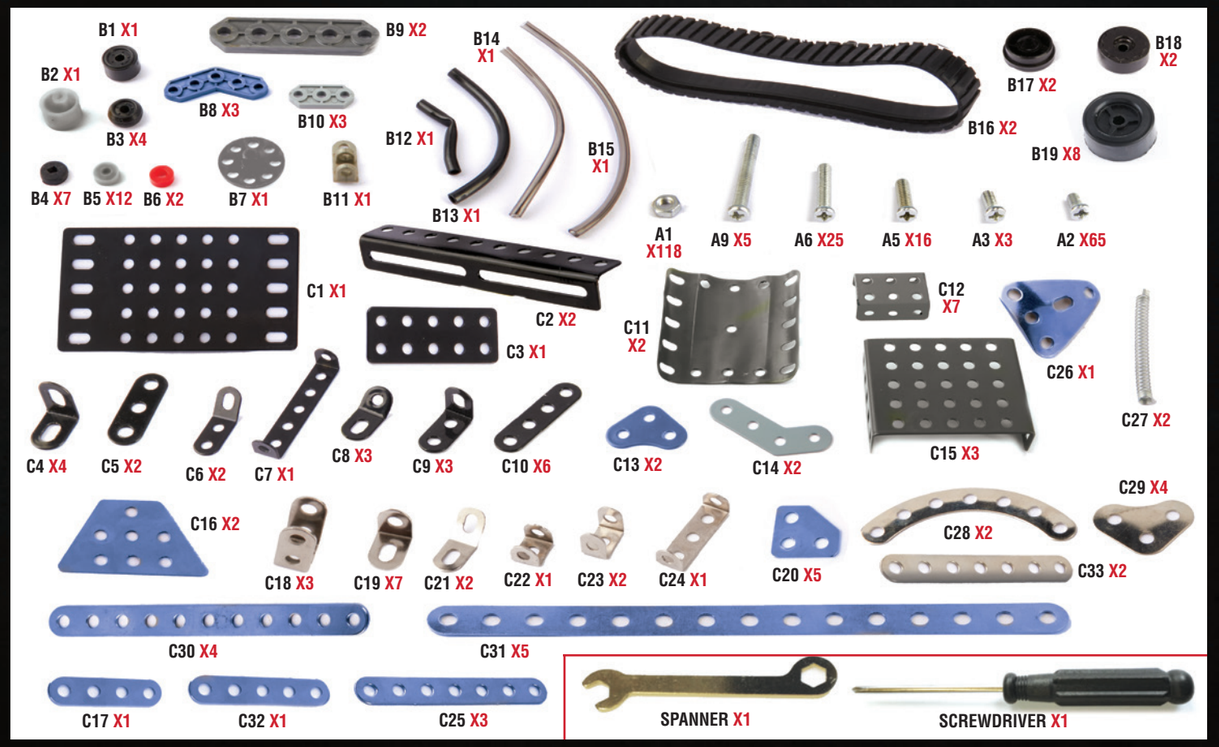

THE GIFT BOX COMPANY

CUSTOMER CARE: Our construction sets are hand packed so from time to time you may find you have too many pieces, and sometimes unfortunately too few. If you are missing a piece(s) please email **customercare@thegiftboxcompany.co.uk** with a list of the parts and their part number along with your name and full address. We will aim to send you the missing piece(s) within 48 hours from receipt of your email. If you do not have access to email please call **01483 317120**.

Design number: 6029429

1

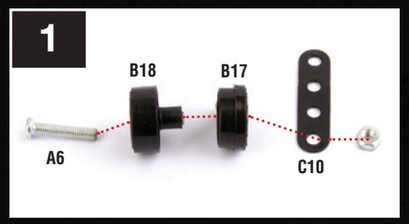

2

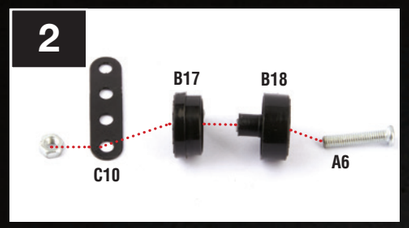

3

4

5

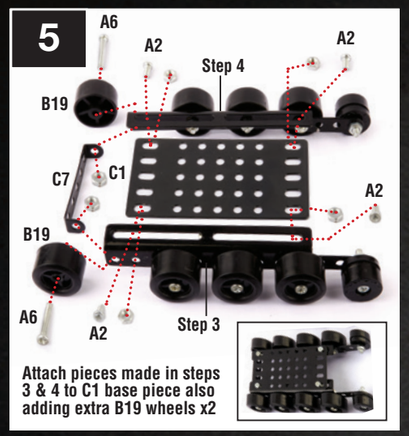

6

7

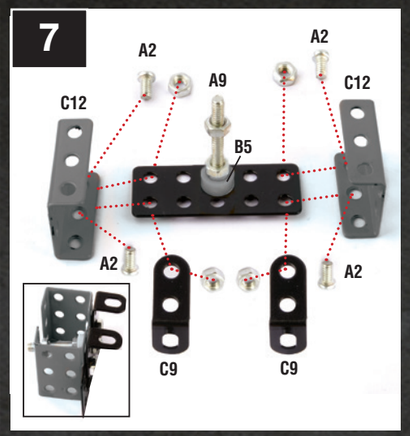

8

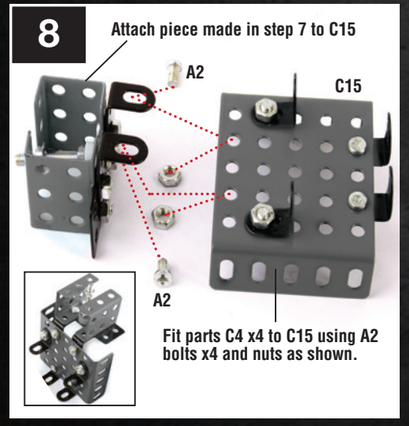

9

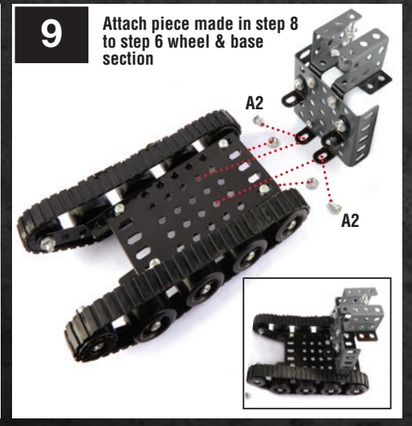

10

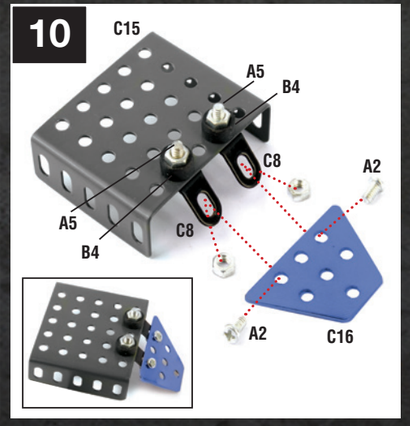

11

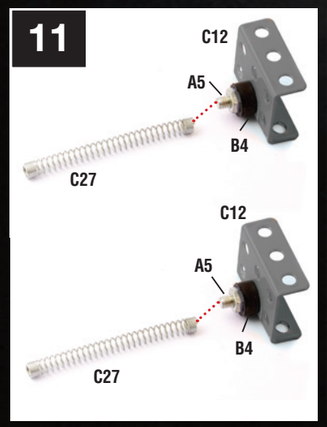

12

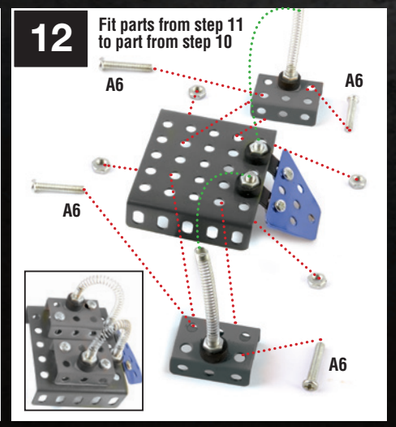

13

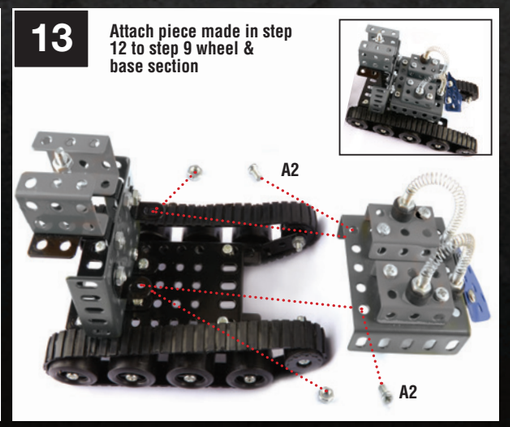

14

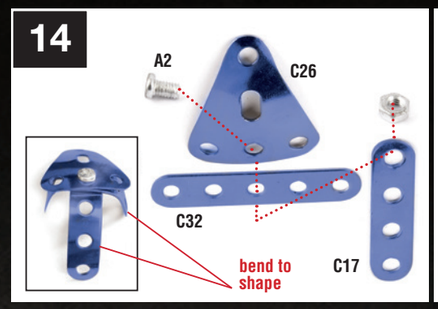

15

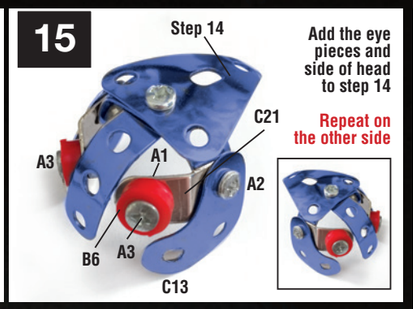

16

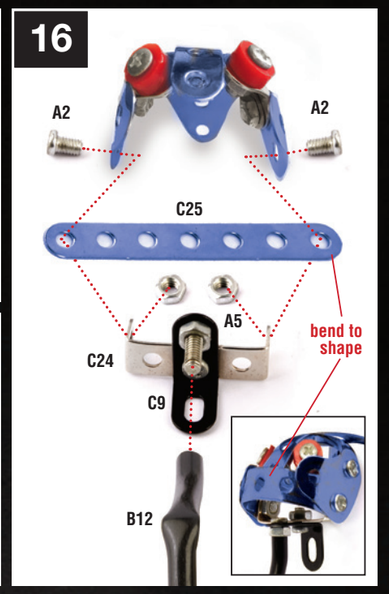

17

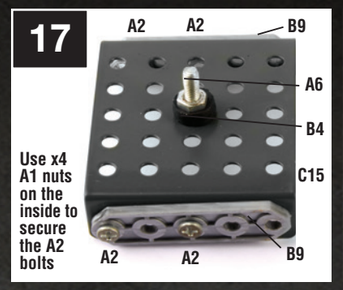

18

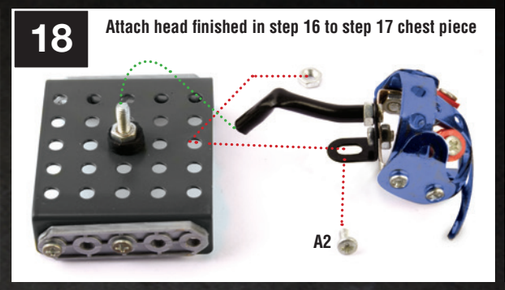

19

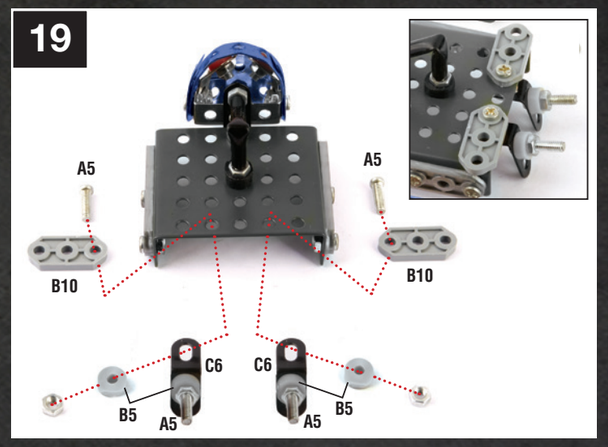

20

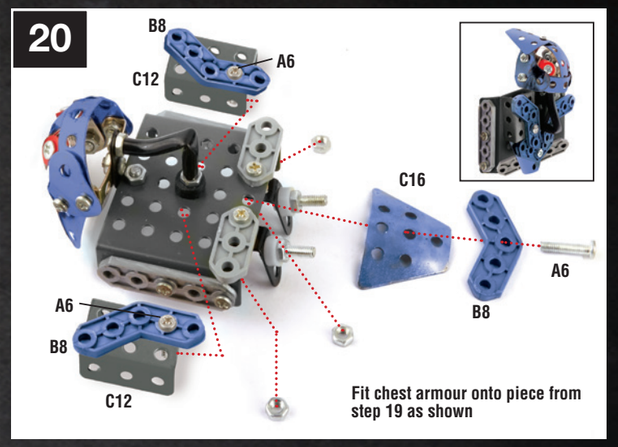

21

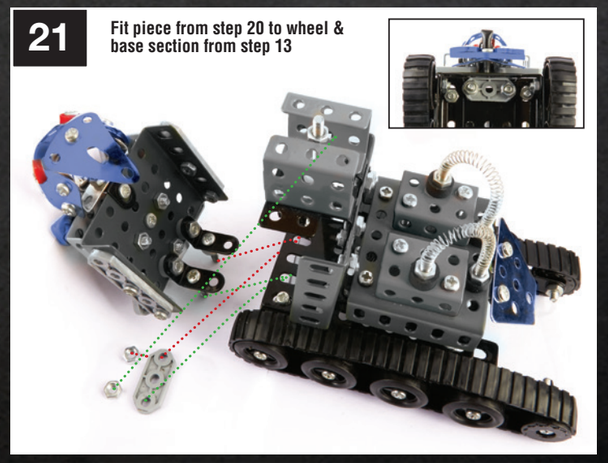

22

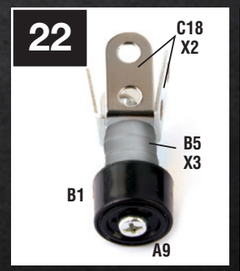

23

24

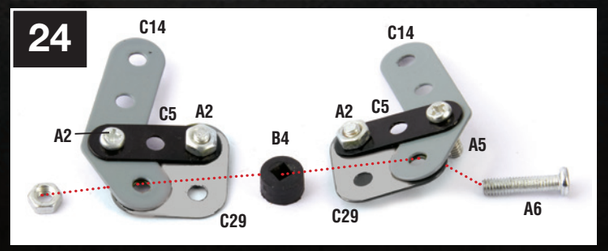

25